southco	PROPRIETARY ITEM - EXCEPT FOR USES EXPRESSLY GRANTED IN WRITING INFORMATION DISCLOSED HEREON IS CONFIDENTIAL AND ALL RIGHTS PATENT AND OTHERWISE ARE RESERVED BY SOUTHCO, INC.	100 SERIES LATCH BODY	DATE	DRAWN	CHKD	SCALE	DRAWING NUMBER
			18FEB2008	CW	MJS	1.5:1	J-07-11-102

REV	DATE	DRAWN/CHKD	DESCRIPTION	PART NUMBER	MATERIAL	FINISH
			INITIAL DWG RELEASE	07-11-102-11	POLYPROPYLENE	WHITE
				07-11-102-12	POLYPROPYLENE	BLACK

MILLIMETERS

ALL DIMENSIONS WITHOUT TOLERANCES ARE FOR REFERENCE ONLY.

THIRD ANGLE PROJECTION

A3 PAPER SIZE

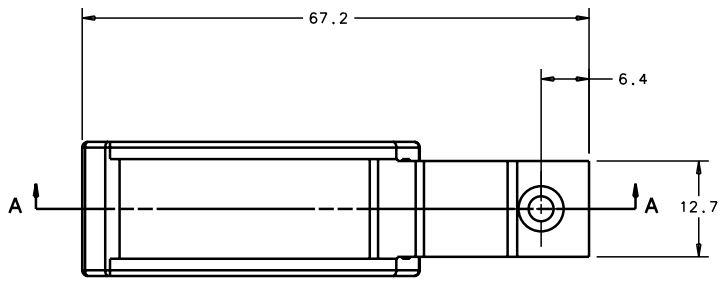

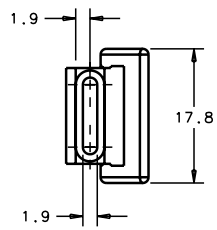

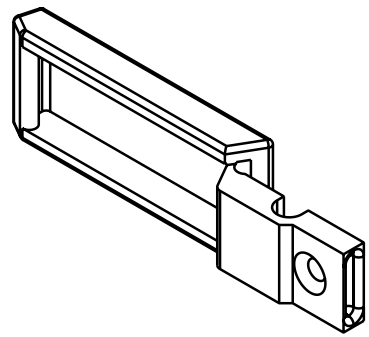

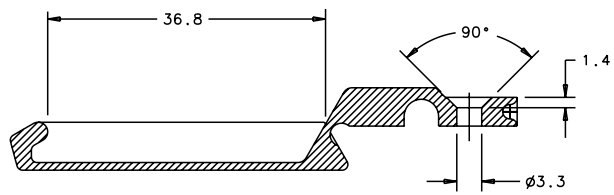

SECTION A-A

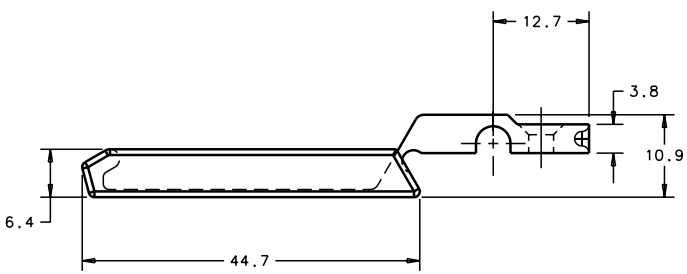

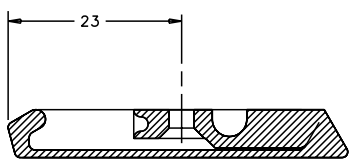

FOLDED