southco®

PROPRIETARY ITEM - EXCEPT FOR USES EXPRESSLY GRANTED IN WRITING INFORMATION DISCLOSED HEREON IS CONFIDENTIAL AND ALL RIGHTS PATENT AND OTHERWISE ARE RESERVED BY SOUTHCO, INC.

NO. A1 ADJUSTABLE DRAW CATCH LATCH ASSEMBLY (BLACK LATCH, BLACK GRIP)

DATE	DRAWN	CHKD	SCALE	DRAWING NUMBER
24JUL85	EGB		.75:1	J-A1-11-92-31

REV	DATE	DRAWN/CHKD	DESCRIPTION	PART NO.	MATERIAL	FINISH	GRIP RANGE
G	12JAN93	EJH/	PRN: S-1-03	A1-11-902-31	SEE NOTE A	SEE NOTE A	3.5"MIN.- 4.5"MAX.
H	20MAY98	IJO/CHW	PRN: A1-205	A1-11-912-31	SEE NOTE A	SEE NOTE A	4.5"MIN.- 5.5"MAX.
I	27APR2005	BRP/	PRN: 2005-0410	A1-11-922-31	SEE NOTE A	SEE NOTE A	5.5"MIN.- 6.5"MAX
J	04MAY2007	MJS/MJS	PRN: P2007-0606				
K	16APR2012	CMS/JED	PRN: P2012-0092				
L	16DEC2014	CMS/JCK	PRN: P2014-2520				

INCHES

ALL DIMENSIONS WITHOUT TOLERANCES ARE FOR REFERENCE ONLY.

THIRD ANGLE PROJECTION

A PAPER SIZE
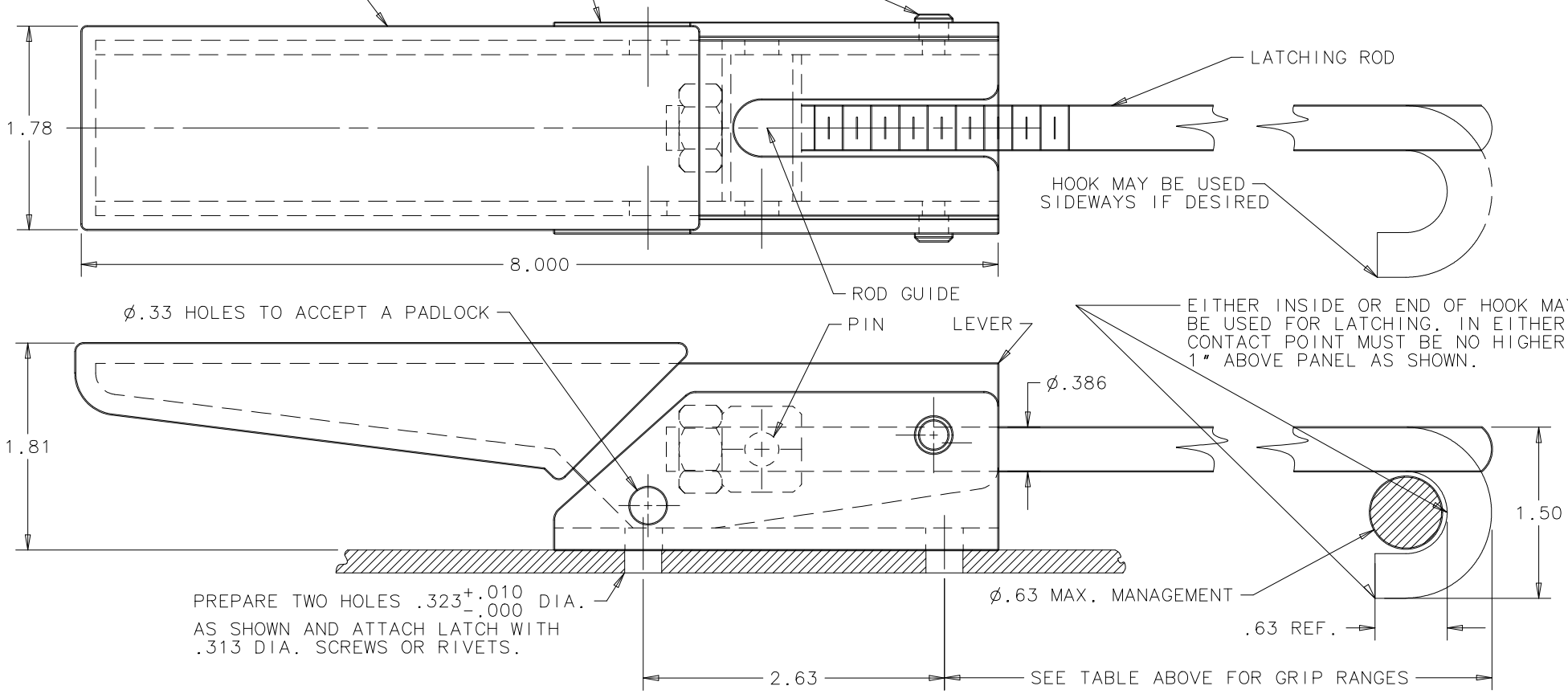
NOTE A- MATERIAL & FINISH LIST:
LEVER- STEEL/BLACK POWDER COAITNG PLUS BLACK VINYL.
ROD- STEEL/ZINC PLATED WITH BLACK ORGANIC COATING.
ROD GUIDE- STEEL/ZINC PLATED WITH BLACK ORGANIC COATING.
JAM NUT- LOW CARBON STEEL/ZINC PLATE,YELLOW.
HOUSING- STEEL/BLACK POWDER COATING.
RIVET,PIN- LOW CARBON STEEL/ZINC FLAKE COATING.