Revision	Revised By	Description	Date	Approval
New	GP	Initial Release	11-12-18	MO

Locking

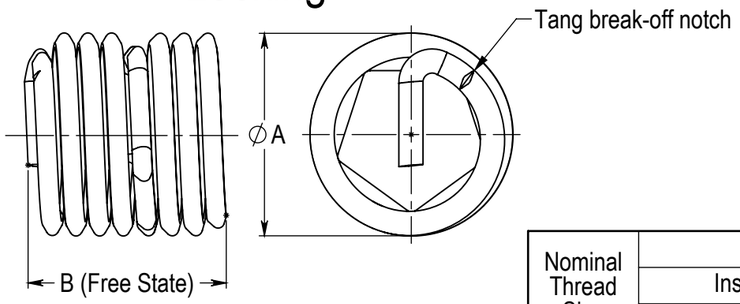

Non-Locking

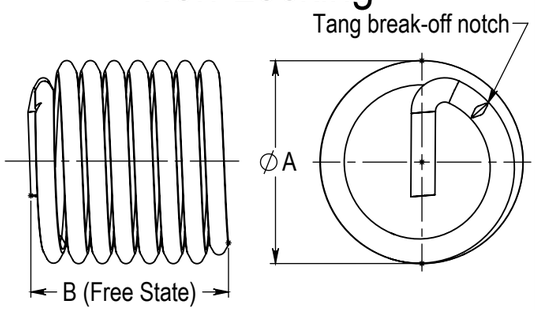

TLC	-	3	C	-	0285	W	SF
1		2	3		4	5	see note 9

Nominal Thread Size	1 Insert Style: Locking	1 Insert Style: Non-Locking	2 Size	3 Material	4 Nominal Length 1D	1.5D	2D	2.5D	3D	5 Finish	Free Outer Diameter (A) Min	Max	Number of Coils (B, see note 4) 1D	1.5D	2D	2.5D	3D
2-56	TLC	TNC	02	B- Phosphor Bronze C- CRES Steel (304 Stainless Steel)[10] N- Nitronic 60® M- Nimonic 90® T- Inconel X-750	0.086	0.129	0.172	0.215	0.258	Blank- No Finish W- Dry Film Lubricant Y- Cadmium V- Silver Plating A- Passivation P- Xylan B- Blue Dye G- Green Dye	0.110	0.119	3	5-1/4	7-3/8	9-5/8	11-7/8
3-48			03		0.099	0.148	0.198	0.248	0.297		0.128	0.139	2-7/8	5	7-1/4	9-3/8	11-1/2
4-40			04		0.112	0.168	0.224	0.280	0.336		0.144	0.159	2-3/4	4-3/4	6-3/4	8-7/8	10-7/8
5-40			05		0.125	0.188	0.250	0.312	0.375		0.158	0.173	3-1/4	5-1/2	7-3/4	10	12-1/4
6-32			06		0.138	0.207	0.276	0.345	0.414		0.178	0.193	2-3/4	4-3/4	6-7/8	8-7/8	10-7/8
8-32			2		0.164	0.246	0.328	0.410	0.492		0.205	0.220	3-1/2	6	8-3/8	10-3/4	13-1/4
10-24			3		0.190	0.285	0.380	0.475	0.570		0.244	0.259	2-7/8	5	7-1/8	9-1/4	11-3/8
12-24			1		0.216	0.324	0.432	0.540	0.648		0.270	0.285	3-1/2	6	8-3/8	10-5/8	13-1/8
1/4-20			4		0.250	0.375	0.500	0.625	0.750		0.310	0.330	3-3/8	5-3/4	8	10-3/8	12-3/4
5/16-18			5		0.312	0.469	0.625	0.781	0.938		0.380	0.400	4	6-5/8	9-1/4	11-7/8	14-5/8
3/8-16			6		0.375	0.562	0.750	0.938	1.125		0.452	0.472	4-3/8	7-1/4	10	12-7/8	15-3/4
7/16-14			7		0.438	0.656	0.875	1.094	1.312		0.526	0.551	4-1/2	7-3/8	10-1/4	13-1/8	16-1/8
1/2-13			8		0.500	0.750	1.000	1.250	1.500		0.597	0.622	4-7/8	7-7/8	11	14-1/8	17-1/8
9/16-12			9		0.562	0.844	1.125	1.406	1.688		0.669	0.694	5-1/8	8-1/4	11-1/2	14-3/4	17-7/8
5/8-11			10		0.625	0.938	1.250	1.562	1.875		0.742	0.767	5-1/4	8-1/2	11-3/4	15	18-3/8
3/4-10			12		0.750	1.125	1.500	1.875	2.250		0.881	0.906	5-7/8	9-3/8	13	16-1/2	20-1/8
7/8-9			14		0.875	1.312	1.750	2.188	2.625		1.022	1.052	6-1/4	10	13-3/4	17-1/2	21-1/4
1-8			16		1.000	1.500	2.000	2.500	3.000		1.166	1.196	6-3/8	10-1/8	14	17-3/4	21-5/8
1-1/8-7			18		1.125	1.688	2.250	2.812	3.375		1.315	1.355	6-1/8	9-7/8	13-5/8	17-1/2	21-1/4
1-1/4-7			20		1.250	1.875	2.500	3.125	3.750		1.443	1.483	7	11-1/4	15-3/8	19-1/2	23-3/4
1-3/8-6			22		1.375	2.062	2.750	3.438	4.125		1.598	1.643	6-1/2	10-1/2	14-3/8	18-3/8	22-1/4
1-1/2-6			24		1.500	2.250	3.000	3.750	4.500		1.727	1.772	7-1/4	11-1/2	15-7/8	20-1/8	24-1/2

Notes:

1. For each threadsize, complete part number consists of combining columns 1-5 across each row.
2. The nominal length is a calculated number and cannot be used to measure the insert in the free state. It is the actual installed length of the insert plus 0.5 pitch ($L_n = L_a + 0.5P$), see column 4.
3. The nominal length of the insert is a function of the nominal thread size (1.5D x 0.190 in = 0.285 in).
4. The number of free coils is measured 90° from the tang. It is the total number of revolutions ± 0.25 coil.
5. Assembled length of insert is in accordance to NASM33537.
6. Locking torque specification conforms to NASM8846.
7. As applicable, inserts meet NASM21209, or NASM122076-NASM122275 specification.
8. When assembled in an STI thread, conforming to NASM33537 specification, the finished thread shall conform to FED-STD-H28/2, and shall accept external threads per MIL-S-7792 or AS8879.
9. For strip-feed packaged inserts, use "SF" at the end of the part number. Not available for all sizes and all plating options. Leave blank for bulk packaged inserts.
10. 304 Stainless Steel is the most popular wire material and meets AS7245 specification.

KATO Fastening Systems, Inc., 11864 Fishing Point Dr., Newport News, VA 23606, www.katofastening.com

Drawing No.	KSTD-003	Description	KATO Tanged UNC Standard, Locking & Non-Locking Screw Thread Inserts (STI)
Revision	New	Drawn By	G. Patterson
Date	11-12-18	Approved By	M. Oana

THIS DRAWING CONTAINS PROPRIETARY INFORMATION AND IS COVERED BY U.S. & INTERNATIONAL PATENTS. REPRODUCTION IN WHOLE, OR IN PART, WITHOUT THE EXPRESS WRITTEN CONSENT OF KATO FASTENING SYSTEMS, INC. IS STRICTLY PROHIBITED